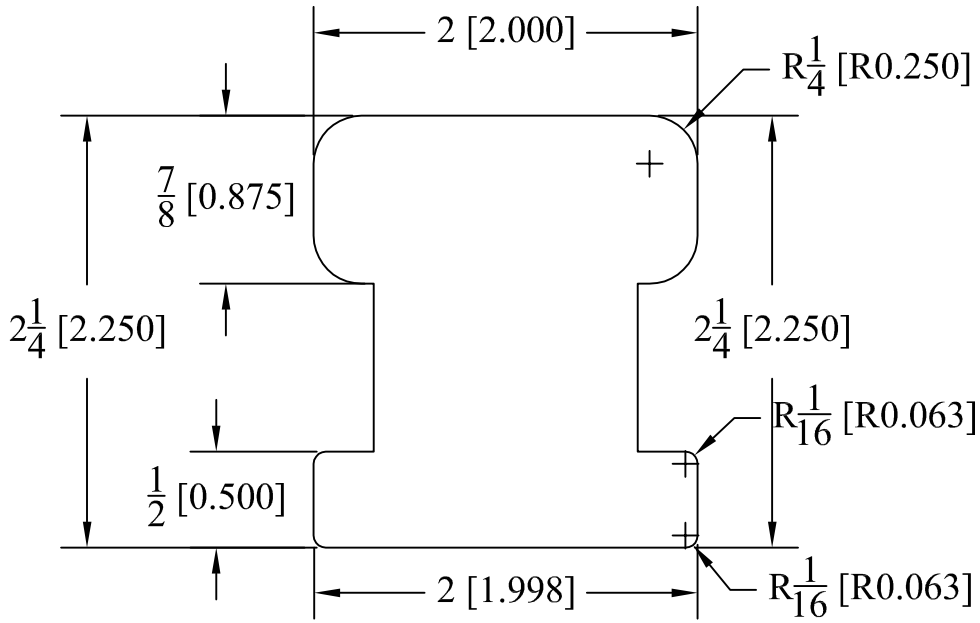
2 [2.000]
R1/4 [R0.250]
7/8 [0.875]
2 1/4 [2.250]
2 1/4 [2.250]
R1/16 [R0.063]
1/2 [0.500]
2 [1.998]
R1/16 [R0.063]

N-3090